PART NUMBER	ITEM ① BODY	ITEM ② INSULATOR	ITEM ③ CONTACT
29-3835	BRASS NICKEL PLATED	DELRIN	BERLLIUM GOLD PLATED

DRAWING NO.
29-3835

REVISIONS

A	RELEASE FOR QUTATION					
	04-17-06	Y U	W	T		
B	CHANG TOTAL LENGTH TOLERANCE; ADD THREAD CHAMFER 0.8X45˚ ADD 4&5 NOTES ; DEL. SOME DIM.					
	12-26-06	L	Y U	T		

Thomas Chow
2007.01.04
14:16:08
+08'00'

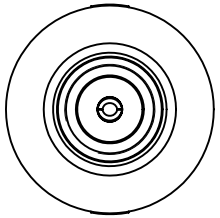

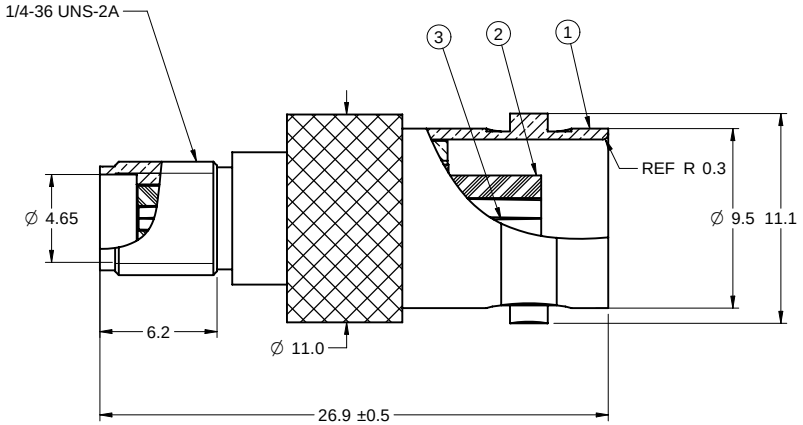

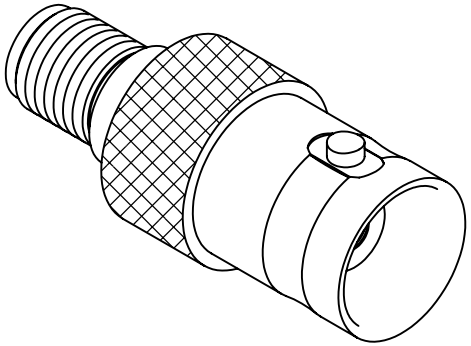

NOTES:

1. ELECTRICAL SPECIFICATIONS
   BNC IMPEDANCE: 50 OHMS NOMINAL
   WORKING VOLTAGE: 500 Vrms MAX AT SEA LEVEL
   DIECTRIC WITHSTANDING VOTALGE: 1500 vrms AT SEA LEVEL
   CORONA LEVEL:375 VOLTS MINIMUM AT 70,000 FEET
   CONTACT RESISTANCE: OUTER-0.2 MILLIOHMS MAXIMUM
   CENTER-2.1 MILLIOHMS MAXIMUM
   INSULATION RESISTANCE: 5000 MEGOHMS MINIMUM

2. MECHANICAL SPECIFICATIONS
   DURABILITY: 500 CYCLES MIN
   FORCE TO ENGAGE/DISENGAGE: 3 LBS MAX

3. ENVIRONMENTAL SPECIFICATIONS
   RECOMMENDED TEMPERATURE RANGE: -55 ℃ TO +85℃
   MOISTURE RESISTANCE: MIL-STD-202

4. PRODUCT SHOULD BE RoHS COMPLIANCE.

5. PACKAGING REQUIREMENT FOLLOWS ENGINEERING DOCUMENT P/N 836-40200001XX.

THIS DRAWING TO BE INTERPRETED PER ANSI Y 14.5M - 1994

COMPANY CONFIDENTIAL

TOLERANCE UNLESS OTHERWISE SPECIFIED		DRAWN BY LINDA.WU	DATE 12-26-06
DECIMALS	mm	CHECKED BY BETTY.YU	DATE 12-26-06
X	± 0.5		
X.X	± 0.2	APPROVED BY THOMAS	DATE 12-26-06
X.XX	± 0.1		
ANGLES	± 0.5˚	U/M mm	

THIS DRAWING WAS PRODUCED BY COMPUTER, DO NOT SCALE DRAWING OR UPDATE MANUALLY.

EMERSON. Network Power — Connectivity Solutions

TITLE
ADAPTER ASSEMBLY,
SMA JACK TO BNC JACK

SHEET	DRAWING NO.	SIZE
1 OF 1	29-3835	C